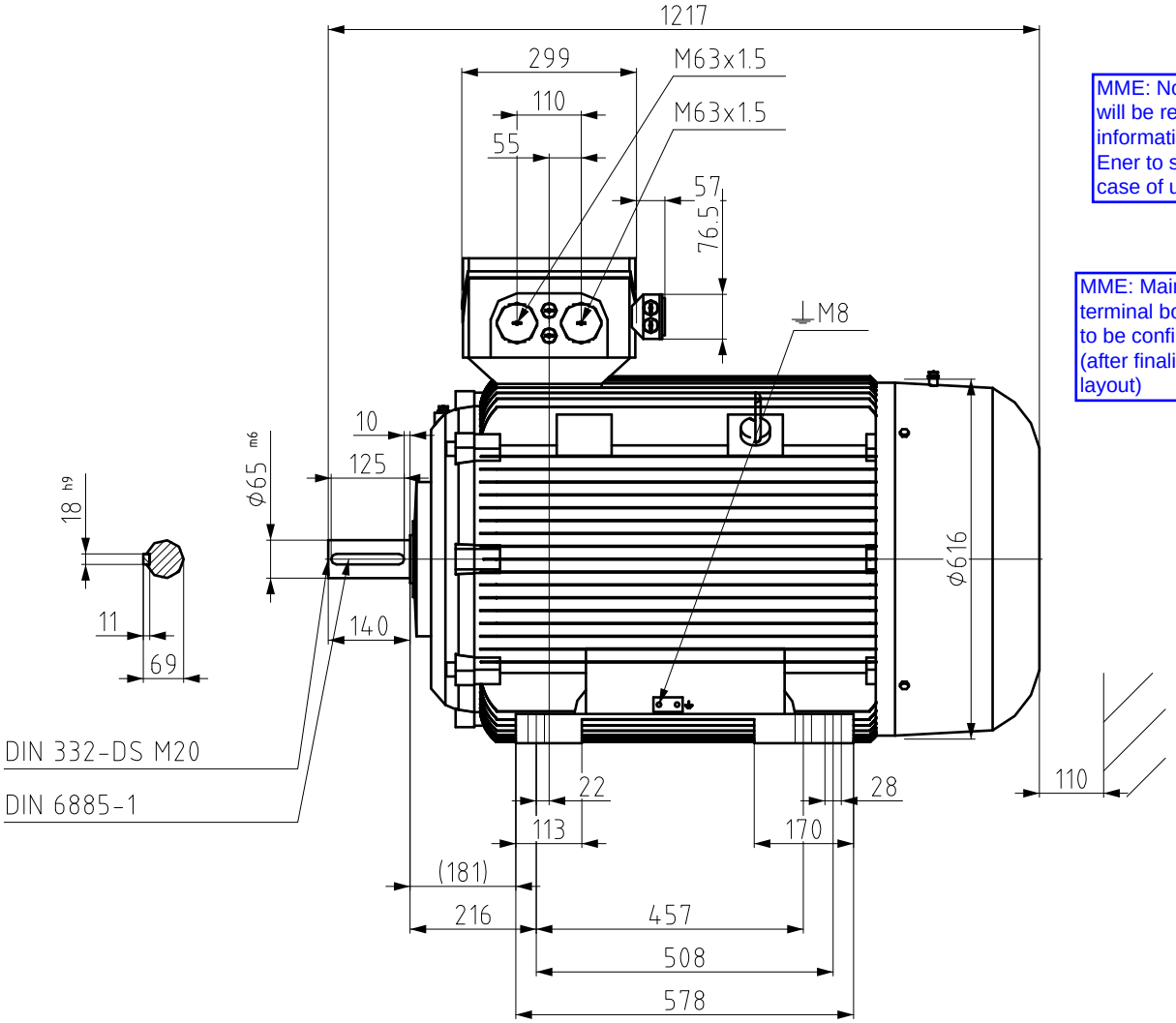


MME: Noted. Document will be retained for information.
Ener to sent drawing in case of updates.

MME: Main cable entry terminal box orientation to be confirmed later (after finalization of layout)

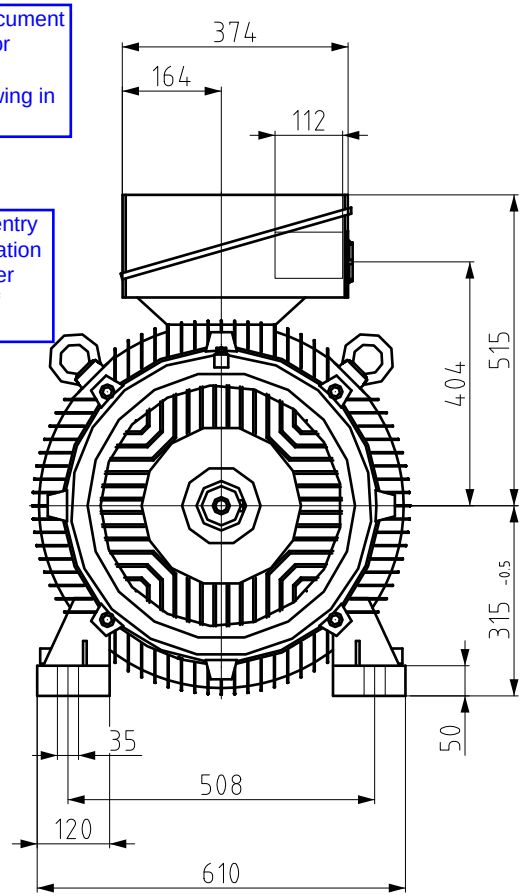


Massbild unverbindlich.
Änderungen konstruktiver Einzelheiten vorbehalten.

Dimension Drawing subject to change.
We reserve the right to change constructional details.

HELMKE

NDOR315M-02-3G

11032400795

| Zust. | Änderung | | Datum | Name | | | | | |
|---|---|---|---|---|---|---|---|---|---|
| Maßstab | CAD | Bauform | Kühlart | Schutzart | Anschlussbolzen | Bearb. | 06.03.2024 | Na | Blatt |
| | | IM B3 | IC 411 | IP 55 | | Gepr. | 06.03.2024 | Pr | 1 |